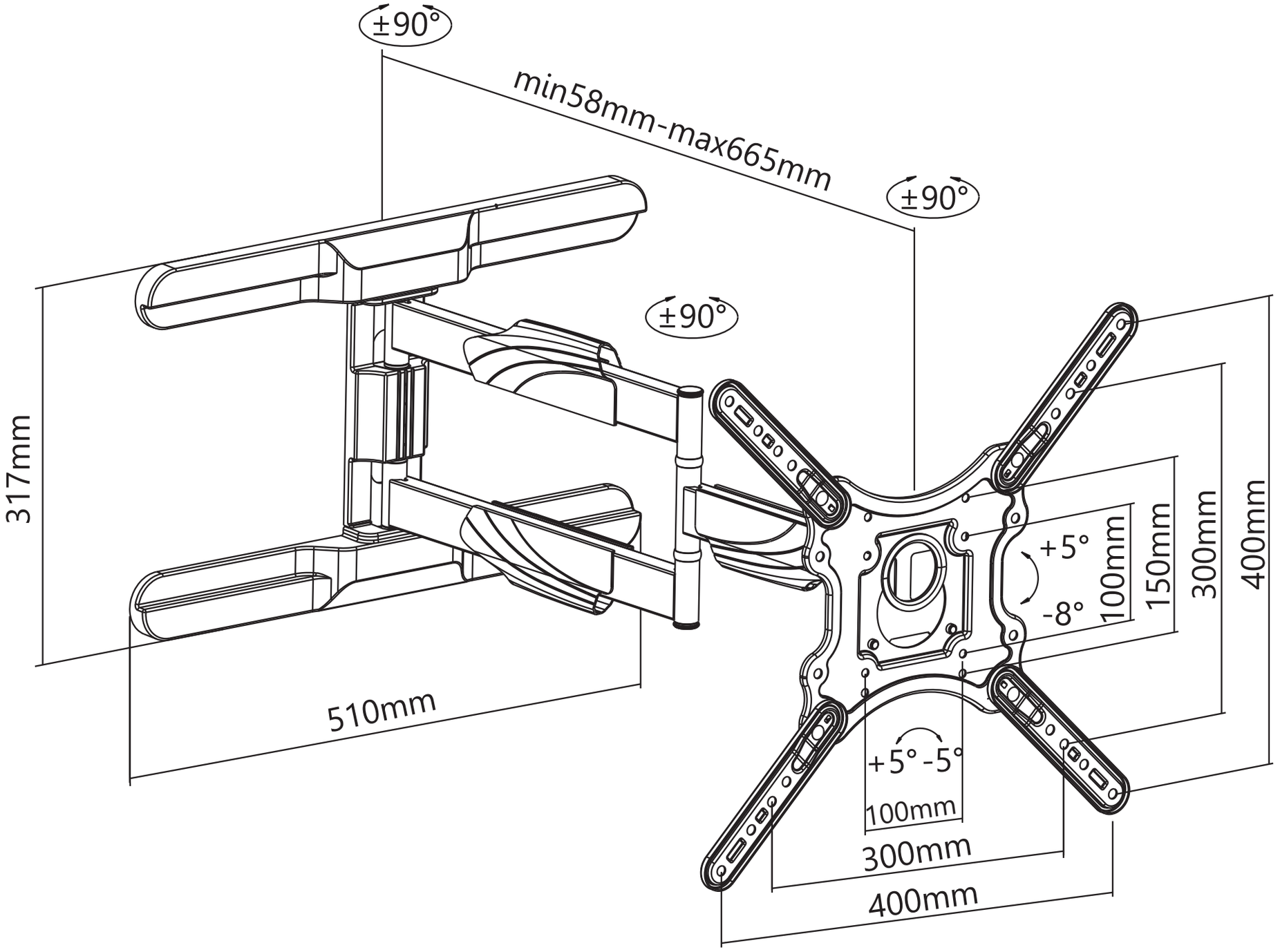
±90°
min58mm-max665mm
±90°
±90°
317mm
510mm
+5°
-8°
100mm
150mm
300mm
400mm
+5° -5°
100mm
300mm
400mm